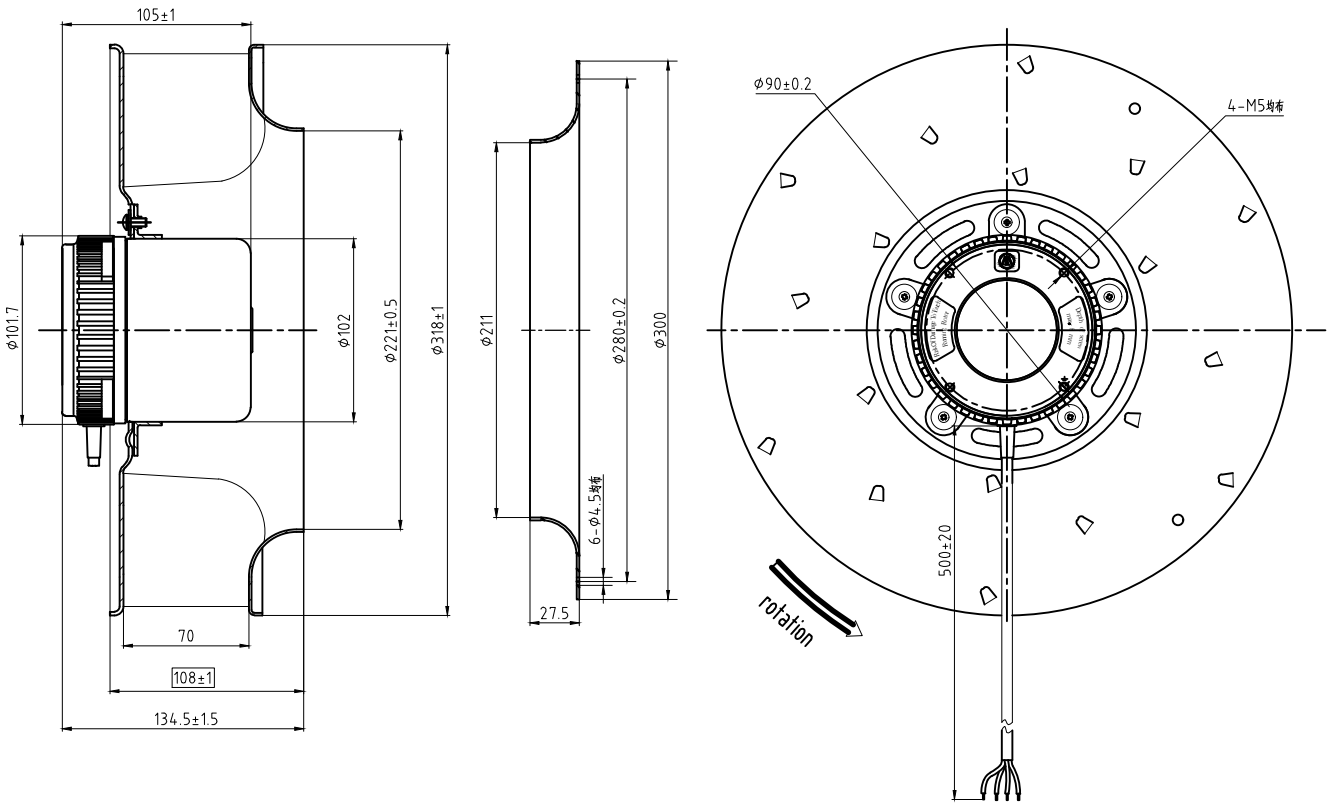

Specification

1. BLDC Centrifugal fan type: FLH310/070A-2212C-06-01
2. Motor type: ZWW102C-2-06-01
3. Impeller type: ϕ310/070A
4. Impeller material: Sheet aluminium
5. Inlet nozzles: Galvanised sheet steel
6. Duty: continuous
7. Voltage: 48VDC
8. Rotation: CW (Viewed from rotor)
9. Bearing: ball bearing
10. dielctrical strength: 500VAC 1min 5mA
11. Tach Pluse Output FG Out: 3 Pulse/rew
12. Operation temperature: -20 ~+60
13. Storage temperature: -30 ~+85
14. Protection class: IP42
15. Insulation class: B
16. Weight: 4.3Kg
17. Balance: G6.3

MOTOR CONNECTION CHART		
FUNCTION	GUAGE	
RED:48VDC	AWG18	UL1015
BLU:GND		
WHT: 0~10VDC/PWM	AWG18	UL1015
YLW: TACH PULSE OUTPUT		

								常州祥明电机有限公司
								FLH310/070A-2212C-06
						A		